BUILDERS & FLYERS
GP4
NEWSLETTER

LAST ISSUE
PLEASE RE-NEW

THE OFFICIAL VOICE OF GP-4 BUILDERS ALL OVER THE WORLD

Volume 35 Sixth issue of 2000

A bevy of "Young Eagles" trying on the GP-4 cockpit for size.

A Connecticut GP-4 Project

Jim Simmons, Cheshire, CT

I am the owner of GP-4 plans #366 and am approximately three years into my GP-4 project.

I'll begin with a brief background of my building/flying experience. I learned to fly in 1977. In 1978, I drove from Connecticut to Oshkosh to view the homebuilt aircraft that I had read about for many years. I was completely in awe of the many great experimental aircraft and have been hooked on this hobby ever since. I had many years of experience in RC model aircraft building and flying. I was interested in learning aerobatic flying and I chose to build a Steen Skybolt. The 180 hp biplane took just over four years and was worth every minute of it. To celebrate the completion of the Skybolt in 1984, I flew from coast to coast, visiting as many EAA fly-ins, airshows, sights and relatives as could possibly be scheduled. Cities included Rapid City, Denver, Idaho falls, Seattle, Portland, San Francisco. Los Angeles, Las Vegas, Dodge City and of course, Oshkosh. (I look forward to a similar trip in my GP-4).

I flew the Skybolt for seven years,

almost 800 hours, with a large percentage of those hours in aerobatic flight. During a visit to Oshkosh in 1989, a gentlemen from Sweden made me the infamous "offer I couldn't refuse" for the Skybolt and soon it went "across the pond" to Europe.

I was now without an aircraft, which I did not enjoy. So almost immediately, I started building a second Skybolt. However, this time I had the Swede's money, so I built a 260 hp version. I completed this biplane in 1994 and have been flying that ever since.

One of the benefits of building a tube and fabric biplane is that you get experience in many of the different skills required for the building an experimental aircraft. A Skybolt has a steel tube fuselage, wooden wings, and is fabric and aluminum covered. Therefore, skills are developed in: welding, woodworking, sheet metal, fiberglass, fabric covering, painting, engine installation, avionics installation, etc.

In 1997, I was once again getting the urge to build another aircraft. I found that of those skills learned on the Skybolt, I personally enjoyed woodworking the most. I focused my search for my next project on wooden designs. My analysis of the wood designs available quickly focused in on George Pereira's GP-4. Besides being all-wood in construction, it had all of the features I was looking for in a "traveling machine". In my opinion, the performance figures for the GP-4 design are phenomenal. Add these figures to "side by side" seating, long range and huge luggage capacity (you must realize that a Skybolt has tandem seating, short range and a luggage capacity of about 20 pounds!) and I was hooked. I ordered plans for the GP-4, including the hydraulic landing gear, in late 1997. I decided to build the landing gear first. Why? Simple-because they interested me. I built a mockup of the wing section, as well as a mockup of the nose well, and proceeded to build the components of the landing gear. It was a fine learning experience and the hydraulic

The Skybolt and I at Oshkosh 97

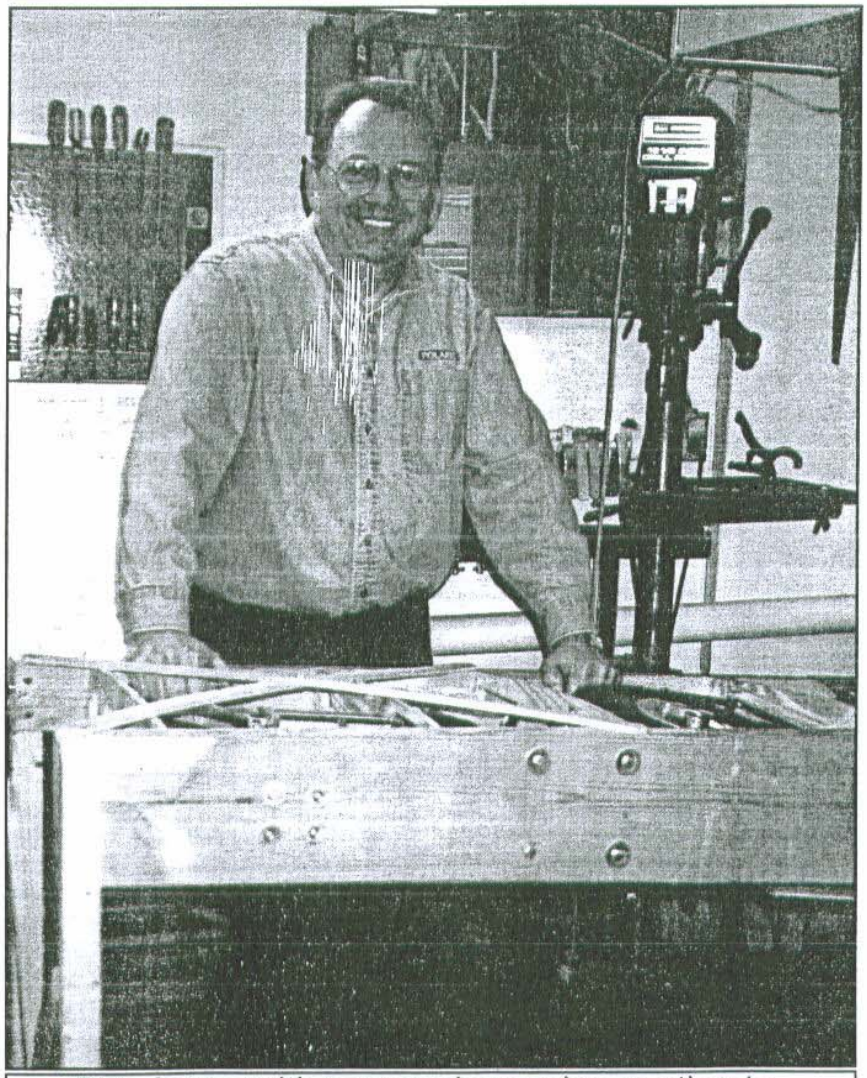

This is me with my mock-up wing section to test my hydraulic main landing gear setup.

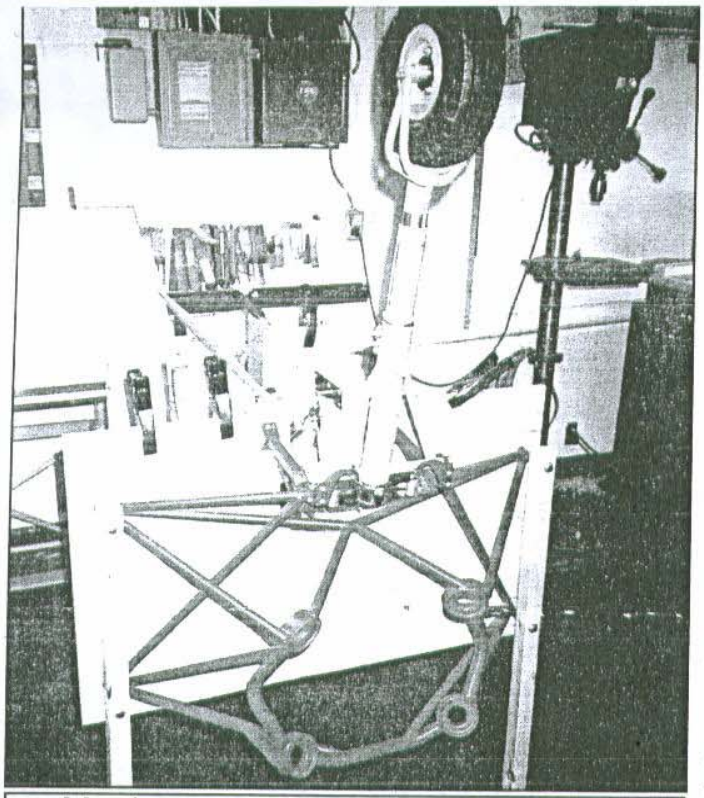

Mock up nose gear well to test the hydraulic nose gear fabrication.

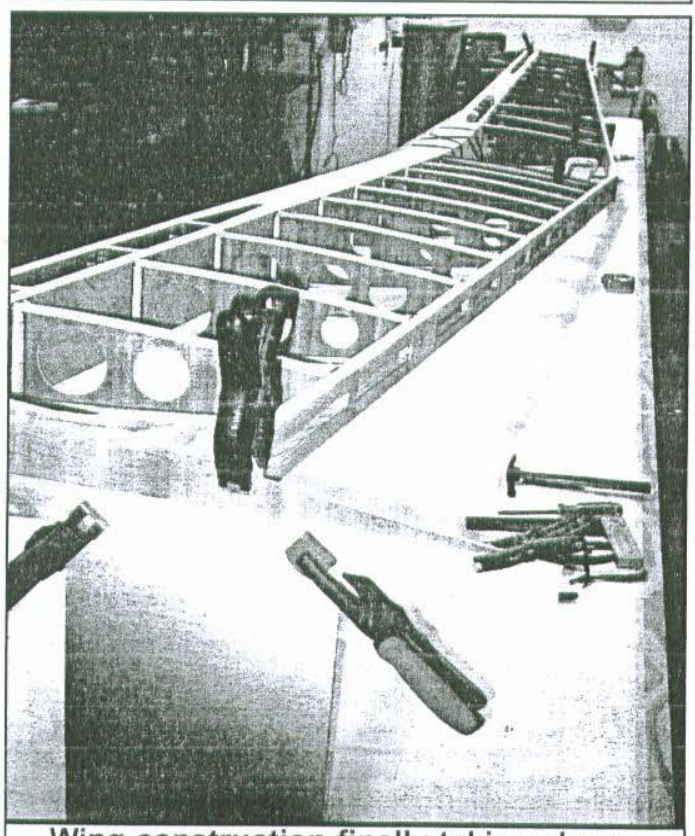

Wing construction finally taking shape. Space to build the 24' wing can be an issue.

I've been fortunate enough to have the opportunity to visit Pat Salamone and his GP-4 (during the flight test period) in Cocoa, Florida and Ernie Holmes GP-4 (just prior to his initial flight) in Orange, Massachusetts.

In 1998, I had to travel to Los Angeles on business and was able to coordinate a side trip to Rio Linda airport in California for a flight with George Pereira in his GP-4. Murphy's Law reared its' ugly head and George had a problem and was working on his engine when I arrived. However, George had arranged for a flight for me in Jake Jackson's GP-4. It was a fine California day, highlighted by a beautiful flight in Jake's magnificent bird. This flight has helped to peak my enthusiasm for the project and I will always be thankful to Jake and George for their hospitality during my brief visit. I should also mention that I also had a chance to visit Mike Traud's GP-4 project and got to see his fuselage under construction. His workmanship was excellent and I'm sure he'll be producing an outstanding example of the design.

Since then, I have built the fuselage structure, tail feathers, fuel tanks (main, left and right wing tanks) and am working on the wing assembly. The main wing structure is built and I'm currently working on the fabrication of the flaps and ailerons.

My project will be a stock GP-4 with no changes. I will be using an IO-360-A1B6 with George's recommended propeller. I view the areas on instrumentation, avionics, and paint scheme as my opportunity to personalize the project.

In conclusion, this project continues to meet or exceed my expectations in every way and I eagerly look forward to flying this excellent design.

I would like to take this opportunity to compliment George Pereira for providing such a fine set of plans. He is also readily available to answer any questions and to offer advice along the way.

Additionally, I would like to compliment "Spud" Spornitz for providing a fine newsletter. It creates a great medium for the sharing of progress and information about the GP-4. I look forward to every issue.

Happy Flying to all,

Jim Simmons
295 Contour Drive
Cheshire, CT 06410
Home Tel: 203.272.9346
Email: SimmonsGP4@aol.com

Comments from Steve Baum and his GP-4

Regarding the windshield bow. It does not block the field of view in my plane. Nor does the spar cut into my legs. I positioned my seat as low as possible. I then positioned fore and aft until my legs cleared the spar. Then I installed the controls so they were in a natural position. In all cases the dimensions in the plans were a close guide - almost perfect for me. The seat dimensions were copied from an old desk chair I had spent many hours in when in college.

Forward and upward visibility is great but below the aircraft is not that great. Using GPS navigation means the you can't see your check point because you are right over it. You will learn to fly a few degrees off the GPS heading when looking for a check point. The lower left and right part of the windshield and canopy near where the bow attaches is all the downward there is. Once you learn how to do an approach its not a problem.

Hinge pins: Another point on installing the control surfaces. Don't make the cut outs in the skin too small on the bottom side of the surfaces. Getting the pins and cotter keys in and out is quite difficult on my plane. Also make sure all hinges can be replaced. I have wear on the hinges and I have had to replace the left outboard elevator hinge already. This is the one that always wears in these types on aircraft.

Relief pressure: This occurred to me while on a long cross country. Make sure all cavities have a ventilation hole. Places like the fuselage sides that are skinned on both sides, require a vent hole. The pressure difference experienced by the airframe in repeated cycles adds up.

Flight re-cap: I logged another cross country flight this weekend in my GP-4. Airplane is working great and is ready for another flight; just fill the tanks and go. You sure can cover some distance at 223 mph. burning 10.5 gph, + or - winds. Make sure your seat is positioned for yourself and is comfortable. Try sitting in the plane for about 2 hours. Read a book or study charts. Try reaching all controls. There isn't much room once your in the seat with the belts and shoulder harness on. I positioned my seat so my eye is level and parallel with the top of the cowl. This puts my eye at about 1/3 of the vertical distance. (I'm guessing) I can easily sit there for 3 + hours. That's important so try it yourself and build for your body size. Leave room for the shoulder harness to fit under the middle canopy support. You will want to open it as soon as you stop and start to taxi.

Steve Baum
Santee, CA sbaum@orincon.com

Another New Guy!

(Oh No! There goes the neighborhood!!)

Hi Guys!

I'm the quintessential "new guy" on the block, having just joined the GP-4 newsletter group, but I have already come up with something worthy of note to those who are in the earlier stages of building. I became interested in the GP-4 about 2 years ago, and purchased plans from George early this year. Along with the plans came one of the newsletters, and in that newsletter was an advertisement to sell a project that was finished to the "constructed-but-not covered- stage. Since this project was within reasonable driving distance from me, I decided to check it out and, since I had only lofted the side truss to my work table, but had not yet sent for wood, it was logical for me to find just what this builder thought of the the he was apparently giving it up.

I found the seller to be a very good wood worker who had built well, loved the project, but was planning a move of family and realized that it would be a long time before he would get to work on the GP-4——so I bought his project!

After the project was in my shop, I discovered that the previous builder had trouble when he tried to attach the engine mounts to the fuselage. Each of the installations had at least one AN-3 bolt missing, and when the mounts were disassembled, it became obvious that he did not have control of hole position, and simply drilled larger holes until he could achieve a fit. But the most salient point that I wish to pass on was that he had welded the AN-3-CS bolts to the mounting straps instead of brazing them. When you do this, you automatically ask for the bolt to become embrittled——and they did! Please, for those of you who are at this stage of building—do not weld where the plans call for brazing. Each call on the plans is given in an effort to support maximum safety. I have been a welder for 40 years, and automatically knew this, but shutter to think of a project going forward with this sort of unknown compromise. All of these bolts were easily broken off of their mounting straps!

Anyway, my project is now proceeding nicely. I have installed new engine mounts, all of the rest of the pre-cover hardware, including the servo for an S-TEC Autopilot. Right now I'm working on the fuselage tank——and really enjoying the project!

Warren Daugherty
Jonestown, PA
1airportway@desupernet.net

GEORGE'S CORNER

"Some Bits and Pieces"

Fellow GP-4 builders:

Here are a few questions and answers that came from builders, and I hopethey will help you in building your GP-4.

Wood selection substitutes:

Vertical grain spruce is the primary structural lumber. When you look at the end of a board, we like to see at least 10 growth rings per inch. More is better. The rings should be as vertical as you can observe, meaning, 90 degrees to the board width. 60 to 70 degrees will work ok. Douglas fir is a good substitute if you run short and can find some at your local lumber yard. White or yellow sugar pine is great for rib capstrips and corner blocks. It is softer than spruce and sands easier when fairing in your ribs. Lumber yards have a grade called pine shelving. You can cut around the knots for cap strips or buy the more expensive-clear pine.

Fuel Caps:

Drawing #6 shows a Ford fuel cap assembly that I designed for a flush cap in each wing and fuselage. These caps are no longer available, except in wrecking yards. The Ford stores say they are out dated.

Wicks and Aircraft Spruce have flush 2" caps, P/N 100-002. They can be glassed into all three tanks for a flush fit. Flush wing tank caps are a must for this 63 series airfoil. It doesn't take much to trip the flow over this wing section.

Brake Lines:

Originally, I plumbed in 1/4" aluminum brake lines with AN fittings to connect the #4 flex hoses. I had a difficult time getting the air out and my brakes were always spongee. I replaced this plumbing with 3/16" nylaflow tubing, P/N SK8201-3/16. It is a one piece length from the wheel to the brake cylinder. You should use a brass insert at each end, P/N 2030x4. This keeps the tubing from crushing from the brass fittings. You need only 2 fittings for each side. At the wheel you need a brass fitting P/N 269P-03x02, and the same at the cylinder or straight fitting P/N 268P-03x02. It depends on how you route your nylaflow tubing. If you ever have to pull the wing off, you can cut the tubing, it is easyand cheap to replace.

Gluing Up the Spar Caps:
(See drawing #17)

Once you have all of the spar cap material fitted, and scarf joints made on the top and bottom two caps, I strongly recommend you make a dry run on bolting up the laminating clamps prior to wetting out the clamps with adhesive. Time yourself to be sure you can get each cap assembly laminated before the adhesive sets.

Optional Scissors Main Gear:

Drawing # 34 shows the main gear scissors as a folded channel. This is difficult unless you have a good mandrel to form the 4130 x 063 flat stock around. The drawing herewith shows the type of scissors designed for the hydraulic landing gear which eliminated the folding channel. A good penetration weld is mandatory to attach the .125 flat stock to the .095 tube bearing. Leave the .095 tube long and then trim to fit strut clevis after welding

Regards,

George

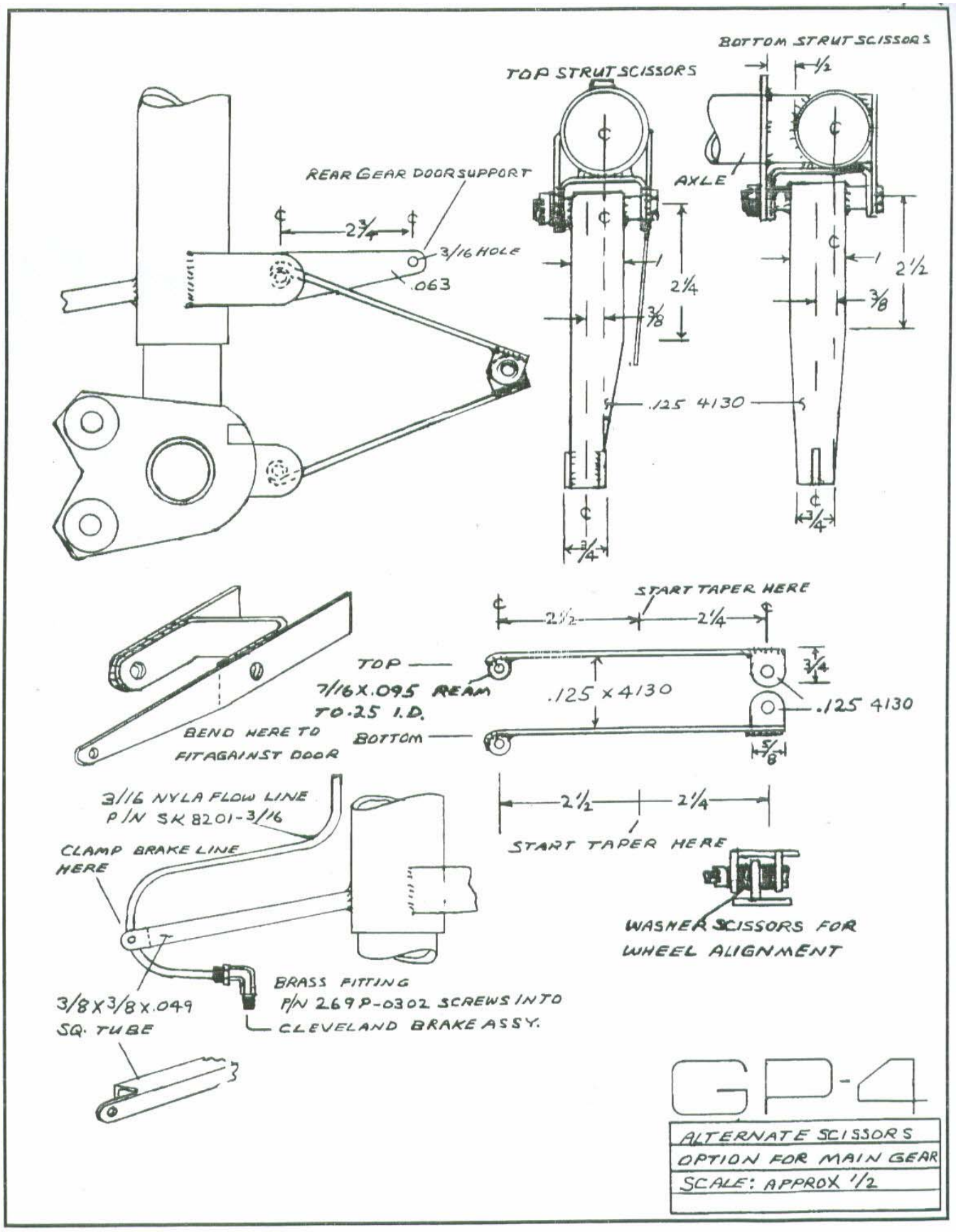
BOTTOM STRUT SCISSORS
TOP STRUT SCISSORS
REAR GEAR DOOR SUPPORT
AXLE
2 3/4
3/16 HOLE
.063
2 1/4
3/8
.125 4130
2 1/2
3/8
3/4
START TAPER HERE
2 1/2
2 1/4
TOP
7/16 X .095 REAM TO .25 I.D.
.125 x 4130
3/4
.125 4130
BEND HERE TO FIT AGAINST DOOR
BOTTOM
5/8
2 1/2
2 1/4
START TAPER HERE
3/16 NYLA FLOW LINE P/N SK 8201-3/16
CLAMP BRAKE LINE HERE
WASHER SCISSORS FOR WHEEL ALIGNMENT
BRASS FITTING P/N 269P-0302 SCREWS INTO CLEVELAND BRAKE ASSY.
3/8 X 3/8 X .049 SQ. TUBE
GP-4
ALTERNATE SCISSORS
OPTION FOR MAIN GEAR
SCALE: APPROX 1/2

The Classifieds

For Sale: **Stainless Steel canopy hardware kit.** The components include: Stainless steel canopy side rails, stainless steel canopy slide rods, 4130 steel brackets for side rail bearing mounts, and the bearings. Call for pricing. Mike Traud,11907 Prospect Hill Drive, Gold River, CA 95670 (916)635-1147

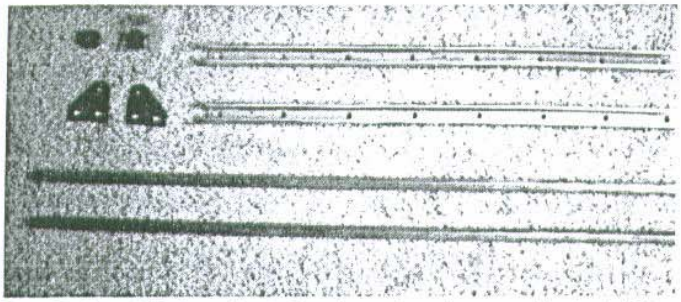

For Sale: GP-4 project: fuselage framing, vertical stabilizer framing, horizontal stab and elevators framing complete. Firewall installed. All fuselage internal hardware complete (D. Capps). All wood packages, two fastener kits. Project signed off by EAA Tech Advisor with compliments on construction quality. Fuselage signed off for closure. Stu Fitrell, sfitrell@lxpk.veridian.com or (301) 373-8087 or 25723 Vista Road, Hollywood, MD 20636. (27/28)

For Sale: New Hydraulic Gear Plans Upgrade. Convert your GP-4 manual landing gear system to hydraulic - electric system. Complete with emergency back up system. (Note: System must be installed prior to wing skinning!, no retro-fits) Complete print package for $150.00 Mail your checks to: George Pereira 3741 El Ricon Way, Sacramento, California 95864 phone (916) 483-3004 Fax (916)978-9813 E-mail GP-4@juno.com

For Sale: Pre-fabricated composite components for GP-4. Cowling , exhaust blisters, inlet ramps, tailcone . Complete four-piece package. Call or E-mail for current pricing. Shipment will be sent "Freight Collect" - Jake Jackson - Rio Linda, CA (916) 992-0608 E-mail J7200@aol.com

Back Issues: We have all of the GP-4 back issues (#1 thru #23) available for $3.00 each. Mail your checks to Bill Spornitz - 1112 East Layton Drive - Olathe, KS 6061-2936

Wanted: Looking for a GP-4 project that is "well under way" through "close to being finished". Will consider all projects. Contact me at (503) 646-5276 or by mail at Edward Mitchell, 13835 S.W. Devonshire, Beaverton, OR 97005

Wanted: An original video (not a copy!) that George Pereira made on the GP-4. I have a multi-copied video now, but is very poor. Will gladly pay a reasonable price. Contact: Spud Spornitz (913) 764-5118 or 1112 East Layton Drive, Olathe, Kansas 66061

Subscribers Information Center

GP-4 Builders & Flyers Newsletter (GP4BFN) is currently published Bimonthly at a rate of $3.33 per issue/$20.00 a year in U.S. $3.50 per issue/$21.00 a yr. in Canada, Alaska & Mexico. $5.00 per issue/$30.00 a yr. (U.S. funds) per 6 issues to foreign subscribers. Send remittance to: GP4BFN, 1112 Layton Drive, Olathe, Kansas 66061. **PLEASE MAKE CHECKS PAYABLE TO: BILL SPORNITZ**

Back issues of ``GP-4 Builders & Flyers Newsletter", back issues are available for $3.00 each.

New ***913-764-5118***

E-MAIL bspornitz@home.com

George Pereira
Phone (916) 483-3004
Fax (916) 978-9813
E-mail ***GP-4@juno.com***

RULES OF THE AIR.....Continued!

14. Always try to keep the number of landings you make equal to the number of take offs you've made.

15. There are three simple rules for making a smooth landing. Unfortunately no one knows what they are.

16. You start with a bag full of luck and an empty bag of experience. The trick is to fill the bag of experience before you empty the bag of luck.

17. Helicopters can't fly; they're just so ugly the earth repels them.

18. If all you can see out of the window is ground that's going round and round and all you can hear is commotion coming from the passenger compartment, things are not at all as they should be.

19. In the ongoing battle between objects made of aluminum going hundreds of miles per hour and the ground going zero miles per hour, the ground has yet to lose.

20. Good judgment comes from experience. Unfortunately, the experience usually comes from bad judgment.

21. It's always a good idea to keep the pointy end going forward as much as possible.

22. Keep looking around. There's always something you've missed.

23. Remember, gravity is not just a good idea. It's the law. And it's not subject to appeal.

24. The three most useless things to a pilot are the altitude above you, runway behind you, and a tenth of a second ago.

BUILDERS & FLYERS NEWSLETTER

1112 EAST LAYTON DRIVE
OLATHE, KANSAS 66061

First Class Mail

LAST ISSUE
PLEASE RE-NEW

NEWS FOR CRAFTSMEN OF FAST WOODEN AIRCRAFT!